Spare parts list

19743 Tablet PC holder »Biobased«

19743-000-55 - black

*Rev 09

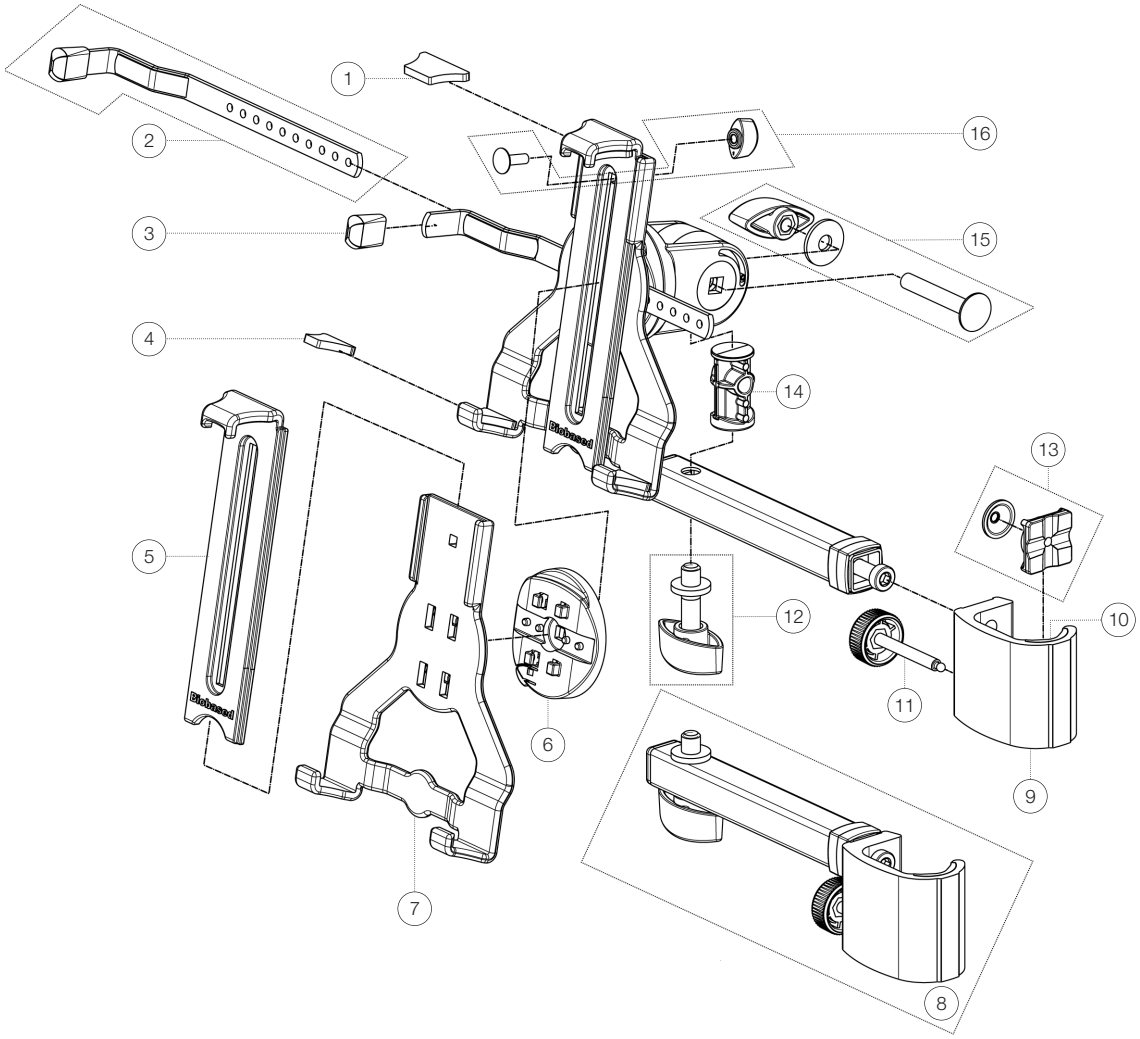

Position	Description	Article No.	Quantity
1	Large foam part 36 x 20 x 4 mm	03-21-864-00	1
2	Mounting bracket complete	3-00-000-176	1
3	End cap 13 x 3,5 mm	01-94-590-55	1
4	Small foam part 24 x 20 x 4 mm	03-21-863-00	2
5	Slider	01-88-071-55	1
6	Adapter	01-87-845-55	1
7	Base frame	01-88-070-55	1
8	Universal clamping holder	19715-300-55	1
9	Clamping prism	02-93-635-55	1
10	Tube protector	01-87-535-55	1
11	Knurled screw M6 x 48 mm	01-82-806-55	1
12	Accessories bag	6-19720-1-55	1
13	Protective cap and pressure plate	3-00-000-001	1
14	Threaded bolt 3/8" ø 22 x 40 mm	03-40-750-00	1
15	Screw connection	3-00-000-099	1
16	Clamping unit	3-00-000-108	1

11 / 2026 · KÖNIG & MEYER GmbH & Co. KG · Kiesweg 2 · 97877 Wertheim/Main · Germany · e-Mail: contact@k-m.de · www.k-m.de