KÖNIG & MEYER
Stands For Music

Spare parts list

19796 Tablet PC holder

19796-000-55 - black

*Rev 04

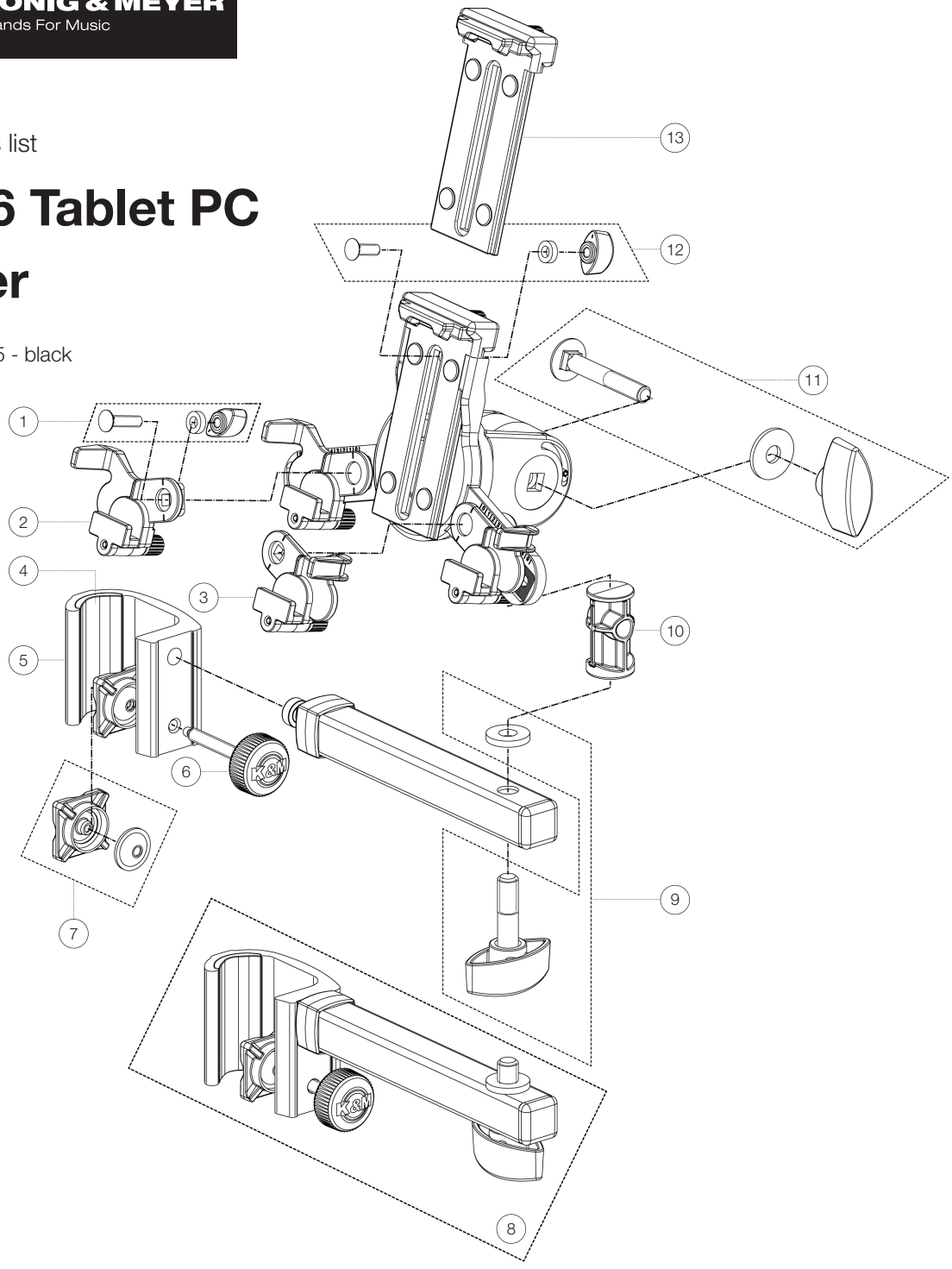

Position	Description	Article No.	Quantity
1	Clamping	3-00-000-013	2
2	Locking brace left complete	6-19795-1-55	1
3	Locking brace right complete	6-19795-2-55	1
4	Tube protector	01-87-535-55	1
5	Clamping prism	02-93-635-55	1
6	Knurled screw M6 x 48 mm	01-82-806-55	1
7	Protective cap and pressure plate	3-00-000-001	1
8	Universal clamping holder	19715-300-55	1
9	Accessories bag	6-19720-1-55	1
10	Threaded bolt 3/8" ø 22 x 40 mm	03-40-750-00	1
11	Screw connection	3-00-000-099	3
12	Clamping	3-00-000-142	1
13	Sliding holder complete	6-19790-8-55	1

11 / 2026 · KÖNIG & MEYER GmbH & Co. KG · Kiesweg 2 · 97877 Wertheim/Main · Germany · e-Mail: contact@k-m.de · www.k-m.de